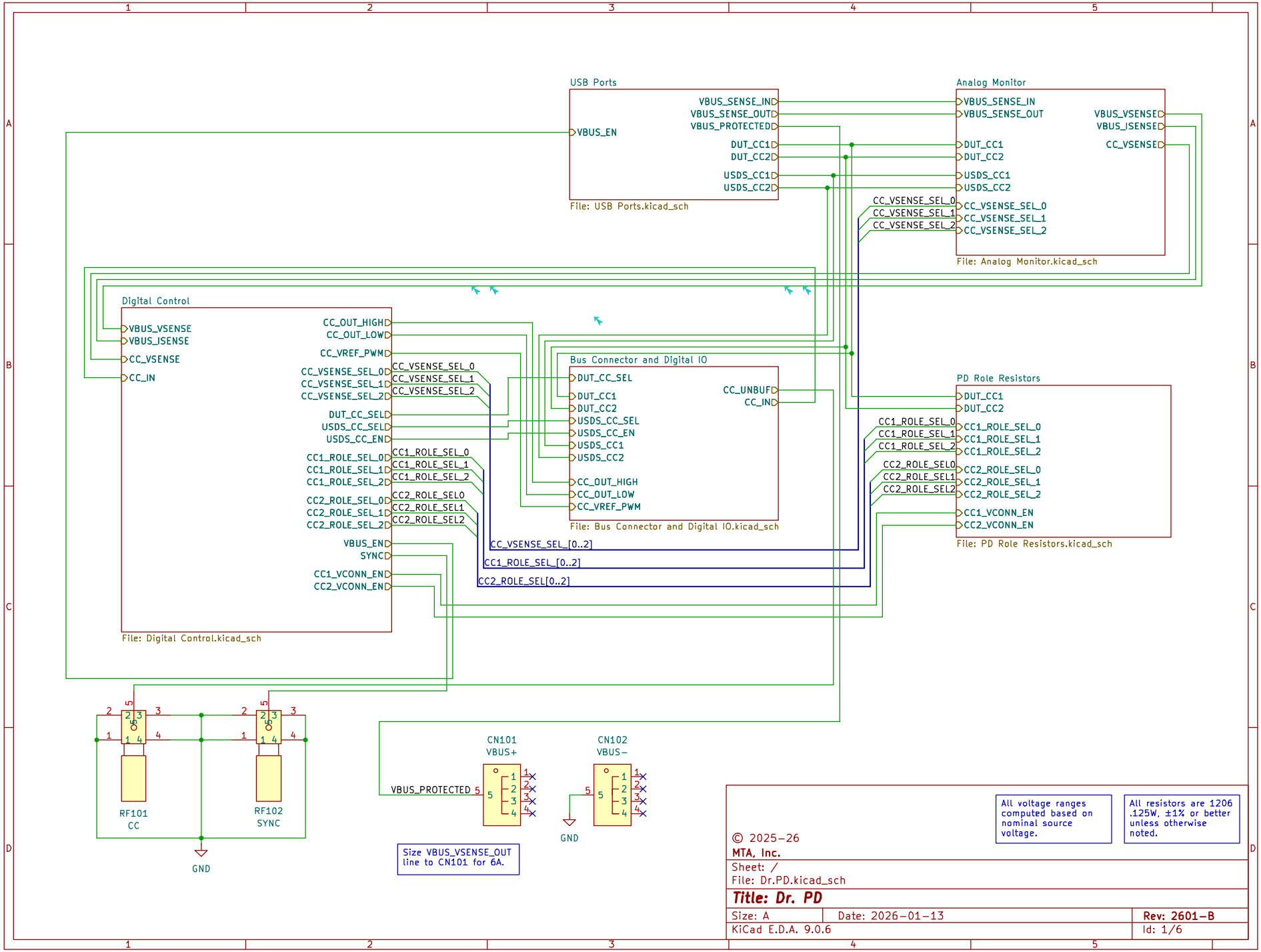
USB Ports
VBUS_EN
VBUS_SENSE_IN
VBUS_SENSE_OUT
VBUS_PROTECTED
DUT_CC1
DUT_CC2
USDS_CC1
USDS_CC2
File: USB Ports.kicad_sch
Analog Monitor
VBUS_SENSE_IN
VBUS_SENSE_OUT
DUT_CC1
DUT_CC2
USDS_CC1
USDS_CC2
CC_VSENSE_SEL_0
CC_VSENSE_SEL_1
CC_VSENSE_SEL_2
VBUS_VSENSE
VBUS_ISENSE
CC_VSENSE
File: Analog Monitor.kicad_sch
Digital Control
VBUS_VSENSE
VBUS_ISENSE
CC_VSENSE
CC_IN
CC_OUT_HIGH
CC_OUT_LOW
CC_VREF_PWM
CC_VSENSE_SEL_0
CC_VSENSE_SEL_1
CC_VSENSE_SEL_2
DUT_CC_SEL
USDS_CC_SEL
USDS_CC_EN
CC1_ROLE_SEL_0
CC1_ROLE_SEL_1
CC1_ROLE_SEL_2
CC2_ROLE_SEL0
CC2_ROLE_SEL1
CC2_ROLE_SEL2
VBUS_EN
SYNC
CC1_VCONN_EN
CC2_VCONN_EN
File: Digital Control.kicad_sch
Bus Connector and Digital IO
DUT_CC_SEL
DUT_CC1
DUT_CC2
USDS_CC_SEL
USDS_CC_EN
USDS_CC1
USDS_CC2
CC_OUT_HIGH
CC_OUT_LOW
CC_VREF_PWM
CC_UNBUF
CC_IN
File: Bus Connector and Digital IO.kicad_sch
PD Role Resistors
DUT_CC1
DUT_CC2
CC1_ROLE_SEL_0
CC1_ROLE_SEL_1
CC1_ROLE_SEL_2
CC2_ROLE_SEL_0
CC2_ROLE_SEL_1
CC2_ROLE_SEL_2
CC1_VCONN_EN
CC2_VCONN_EN
File: PD Role Resistors.kicad_sch
CC_VSENSE_SEL_[0..2]
CC1_ROLE_SEL_[0..2]
CC2_ROLE_SEL[0..2]
RF101
CC
RF102
SYNC
GND
CN101
VBUS+
CN102
VBUS−
VBUS_PROTECTED
GND
Size VBUS_VSENSE_OUT line to CN101 for 6A.
All voltage ranges computed based on nominal source voltage.
All resistors are 1206 .125W, ±1% or better unless otherwise noted.
© 2025-26
MTA, Inc.
Sheet: /
File: Dr.PD.kicad_sch
Title: Dr. PD
Size: A
Date: 2026-01-13
Rev: 2601-B
KiCad E.D.A. 9.0.6
Id: 1/6

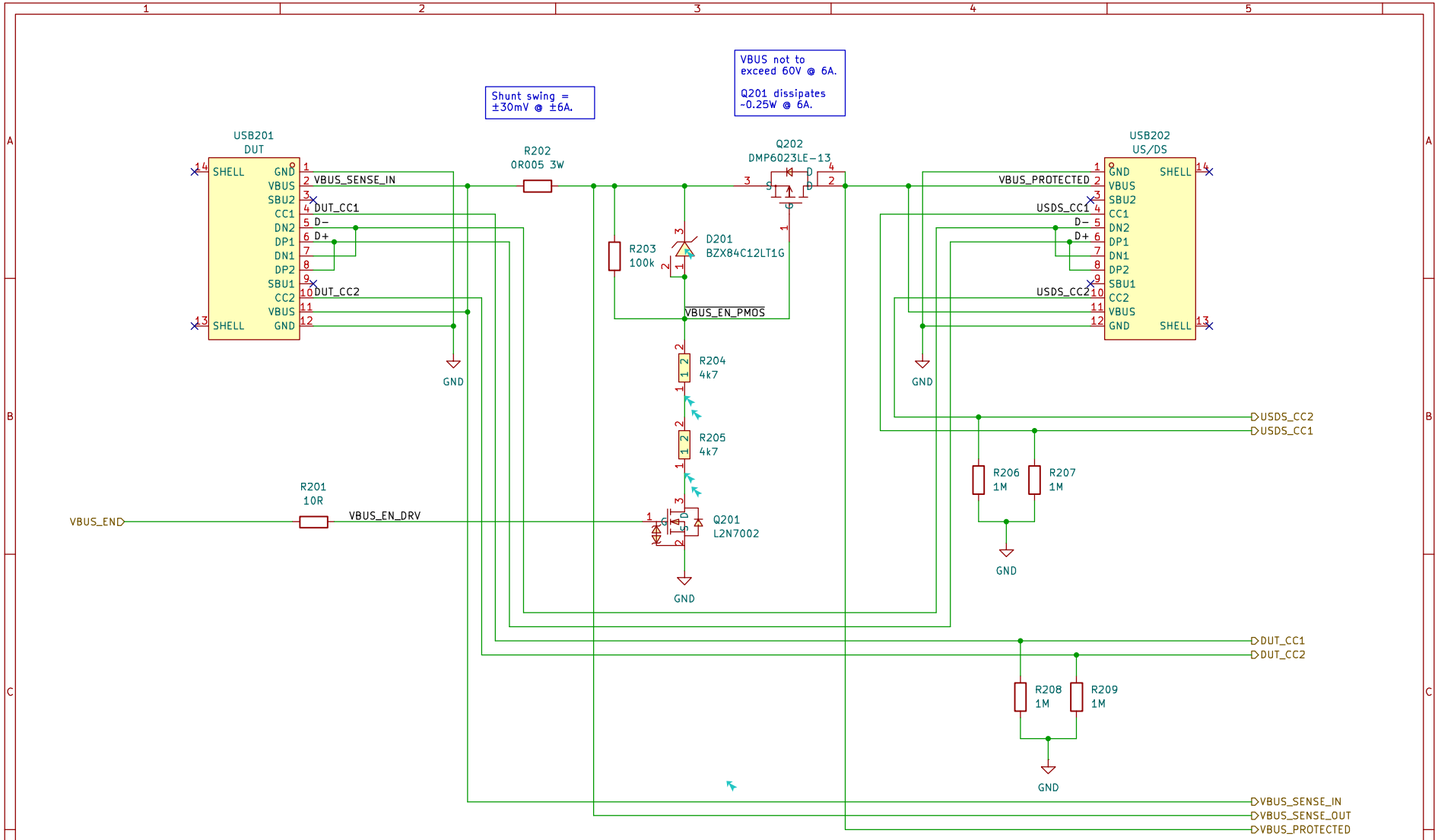

© 2025−26
MTA, Inc.

Sheet: /USB Ports/
File: USB Ports.kicad_sch

Title: USB Ports

Size: A	Date: 2026−01−13	Rev: 2601−B
KiCad E.D.A. 9.0.6		Id: 2/6

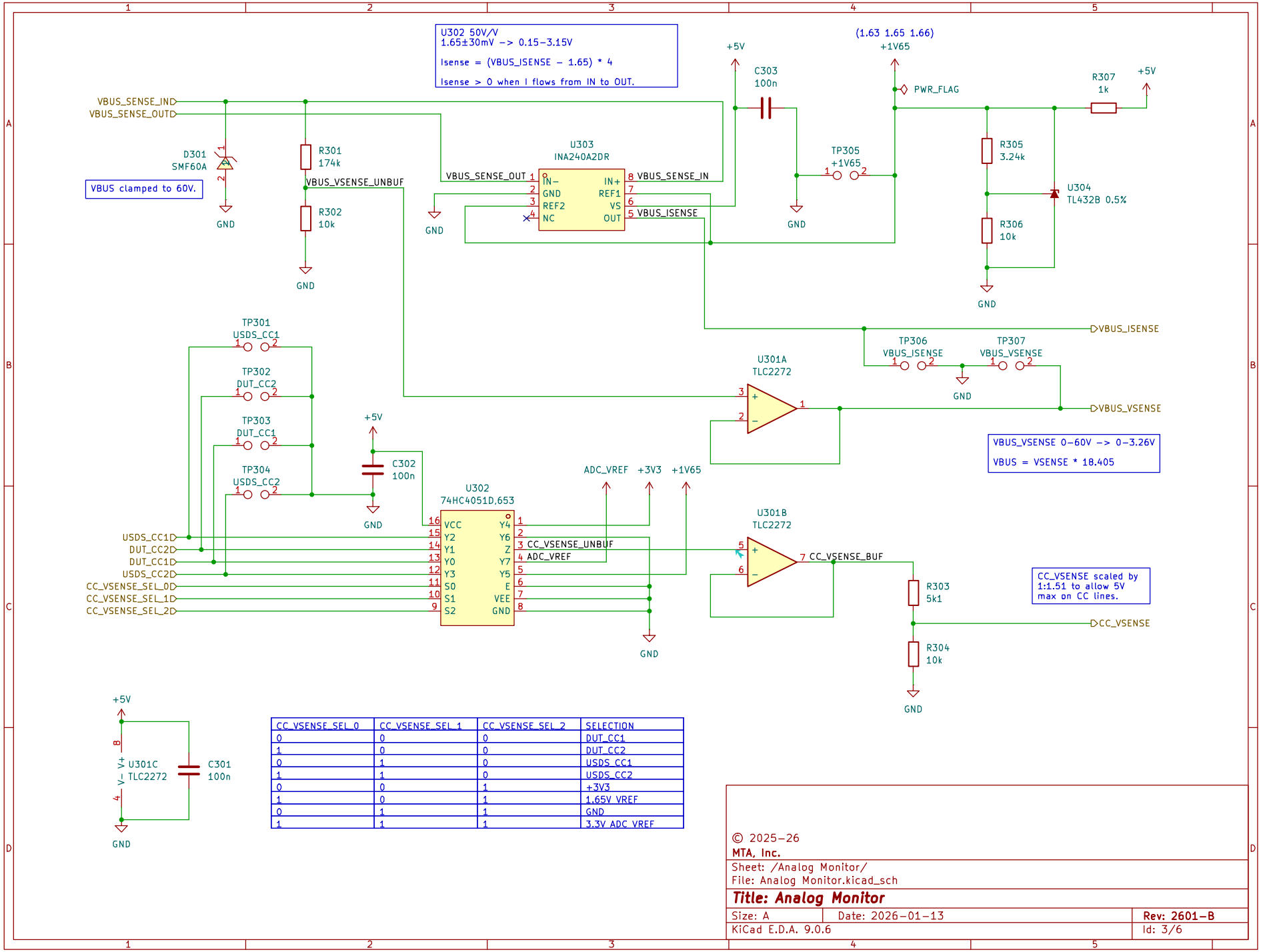

CC_VSENSE_SEL_0	CC_VSENSE_SEL_1	CC_VSENSE_SEL_2	SELECTION
0	0	0	DUT_CC1
1	0	0	DUT_CC2
0	1	0	USDS_CC1
1	1	0	USDS_CC2
0	0	1	+3V3
1	0	1	1.65V VREF
0	1	1	GND
1	1	1	3.3V ADC VREF

© 2025-26
MTA, Inc.

Sheet: /Analog Monitor/
File: Analog Monitor.kicad_sch

Title: Analog Monitor

Size: A	Date: 2026-01-13	Rev: 2601-B
KiCad E.D.A. 9.0.6		Id: 3/6

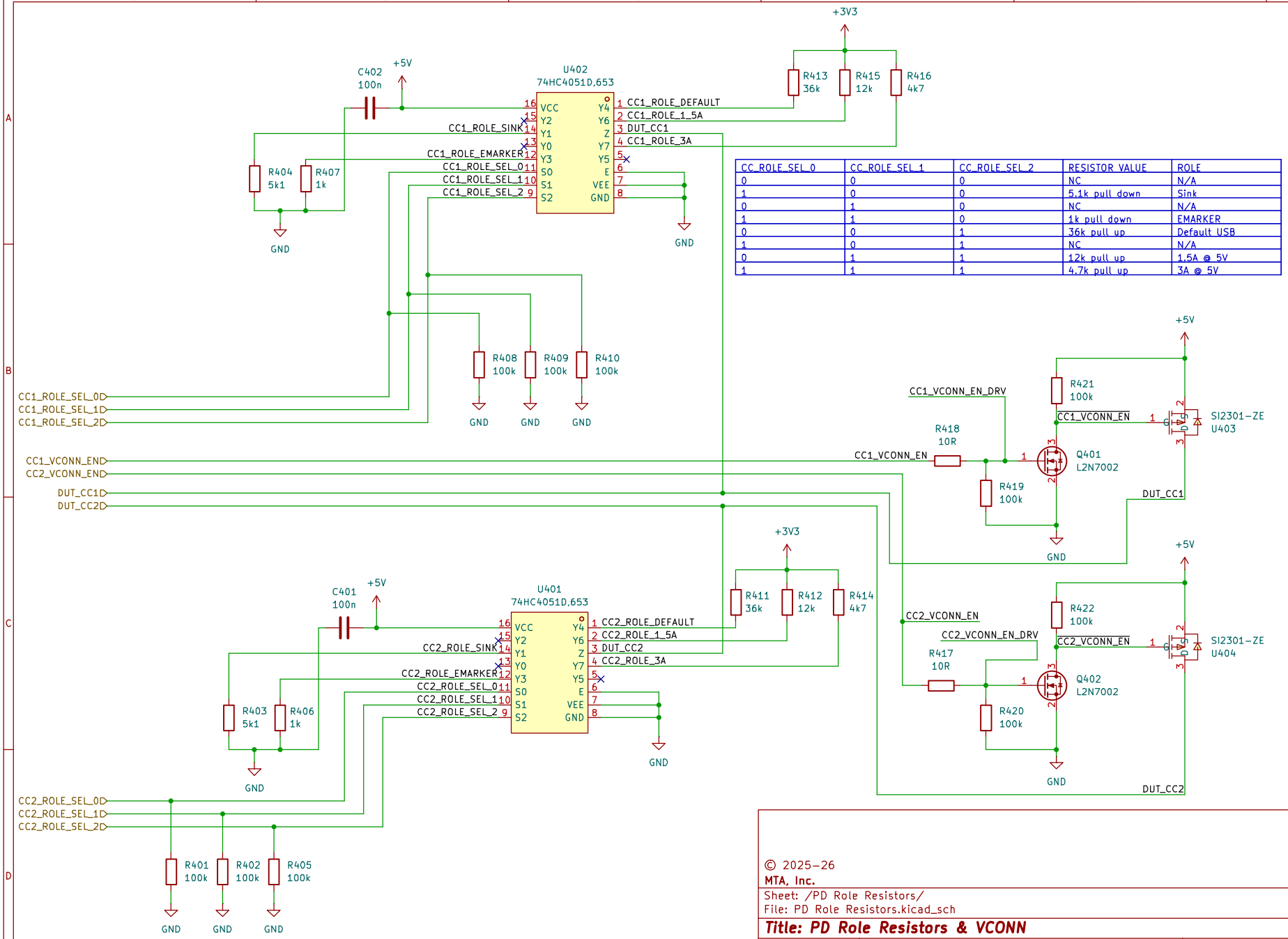

CC_ROLE_SEL_0	CC_ROLE_SEL_1	CC_ROLE_SEL_2	RESISTOR VALUE	ROLE
0	0	0	NC	N/A
1	0	0	5.1k pull down	Sink
0	1	0	NC	N/A
1	1	0	1k pull down	EMARKER
0	0	1	36k pull up	Default USB
1	0	1	NC	N/A
0	1	1	12k pull up	1.5A @ 5V
1	1	1	4.7k pull up	3A @ 5V

© 2025-26
MTA, Inc.

Sheet: /PD Role Resistors/
File: PD Role Resistors.kicad_sch

Title: PD Role Resistors & VCONN

Size: A	Date: 2026-01-13	Rev: 2601-B
KiCad E.D.A. 9.0.6		Id: 4/6

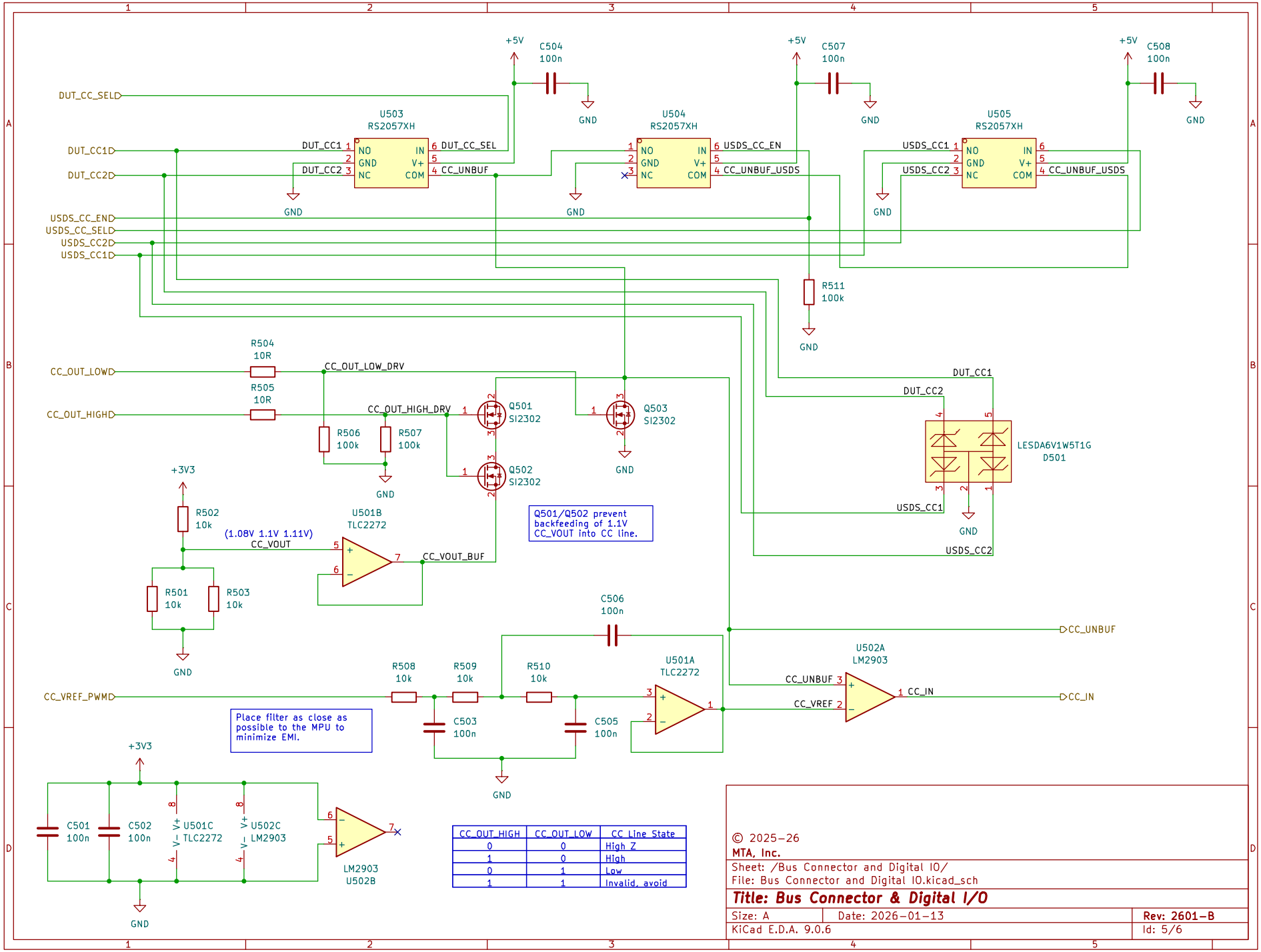

CC_OUT_HIGH	CC_OUT_LOW	CC Line State
0	0	High Z
1	0	High
0	1	Low
1	1	Invalid, avoid

© 2025-26
MTA, Inc.

Sheet: /Bus Connector and Digital IO/
File: Bus Connector and Digital IO.kicad_sch

Title: Bus Connector & Digital I/O

Size: A	Date: 2026-01-13	Rev: 2601-B
KiCad E.D.A. 9.0.6		Id: 5/6

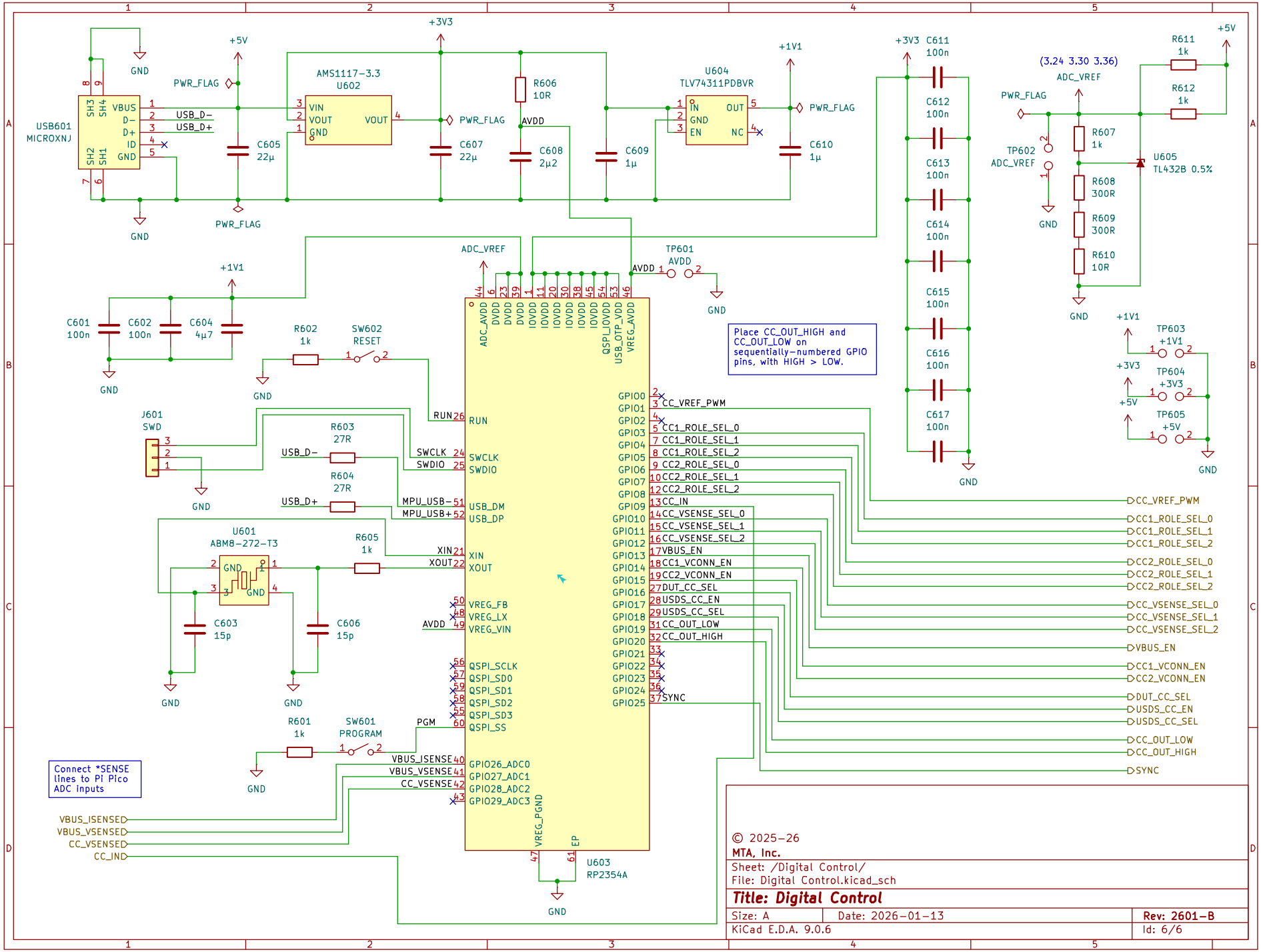

© 2025−26
MTA, Inc.

Sheet: /Digital Control/
File: Digital Control.kicad_sch

Title: Digital Control

Size: A	Date: 2026−01−13	Rev: 2601−B
KiCad E.D.A. 9.0.6		Id: 6/6